ACCESSORIES

GoLight

Broadband white light source with a flat spectrum

GoLight is a compact multi-LED broadband source that delivers a flat, continuous spectrum for absorption and transmission measurements. It attaches magnetically to the IndiGo and is powered from a simple USB-C cable. Combined with the SpectroLab filter module, it forms a complete optical filter characterisation bench.



380–950 nm	USB-C	Magnetic	Ø 52 mm	Stable
Flat spectrum	Powered	IndiGo mount	Diameter	Integrated cooling

Key features

- Multi-LED flat continuous spectrum
- USB-C power from PC or wall adapter
- Magnetic attachment to the IndiGo
- Integrated cooling for long-term stability
- Filter adapter kits available
- SpectroLab filter analysis module

Options

Optical filter kit
Adapters for SM1, SM2, 0.5" and 1" square filters.

Astronomy filter kit
Adapters for M28.5 and M48 filters.

NIR version
Modified source for 700 – 1100 nm on request.

Typical applications

Optical filter QC · Transmission measurements · Absorbance of liquids · Astronomy filters · Education

OPTICAL	
Spectrum	380 – 950 nm, flat and continuous
Technology	Multi-LED

ELECTRICAL	
Power	USB-C (computer or wall adapter)

MECHANICAL	
Dimensions	Ø 52 mm × 50 mm
Mounting	Magnetic on IndiGo
Thermal	Integrated cooling

SOFTWARE	
SpectroLab filter module	Centre wavelength, cut-off, bandwidth, steepness

Ordering information

AR00052 GoLight + optical filter kit

AR00078 GoLight + astronomical filter kit

Part numbers for information – please confirm with GoyaLab when ordering.

Accessories

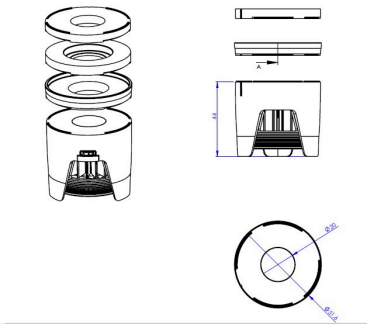

Filter adapters

About GoyaLab — French manufacturer of portable and process spectrometers based in Talence (Bordeaux). GoyaLab designs compact, connected and affordable spectroscopy instruments — from the smartphone-based GoSpectro to the IndiGo handheld range and the T-Trace in-line process spectrometers — and supports customers in developing their own spectral applications.

Specifications are typical values and subject to change without notice. © 2026 GoyaLab SAS. All trademarks are the property of their respective owners.